10kV 50-1250kVA distribution dry-type 3-phase transformer

Rated Capacity (kVA)	HV (kV)	Tapping Range	LV (kV)	Vector Group	No Load Loss (W)	On Load Loss (W)	Impedance Voltage (%)	
30	6 6.3 10 10.5 11	±5 ±5×2.5	0.4	Dyn11 Yyn0	220	750	4.0	
50					310	1060		
80					420	1460		
100					450	1670		
125					530	1960		
160					610	22050		
200					710	2600		
250					810	3050		
315					990	3650		
400					1100	4300		
500					1310	5150		
630					1640	6200	4.5	
800					1710	7500		
1000					1990	10300		
1250					2350	12000		

Notes when placing order

Transformer type: Rated capacity kVA

Voltage: high voltage kV/low voltage kV

Tapping range: ±2×2.5% ☐ ±5% ☐ Other ☐

Number of phases: three-phase single-phase ☐

Frequency: 50HZ ☐ 60HZ ☐ ☐

Connection group: Yyn0 ☐ Dyn11 ☐ Other ☐

Impedance voltage: 4% ☐ 6% ☐ Other

Cooling—down method: self-cooled AN ☐ Air cooling ☐

Protecting grade of outer casing: IP00 ☐ IP20 ☐ IP23 Other ☐

Method of incoming and outgoing line: Incoming line to lower part and outgoing line from upper part ☐

Incoming line to upper part and outgoing line from upper part ☐

Incoming line to lower pan and outgoing line from side part ☐

0ther ☐

Composite Insulators

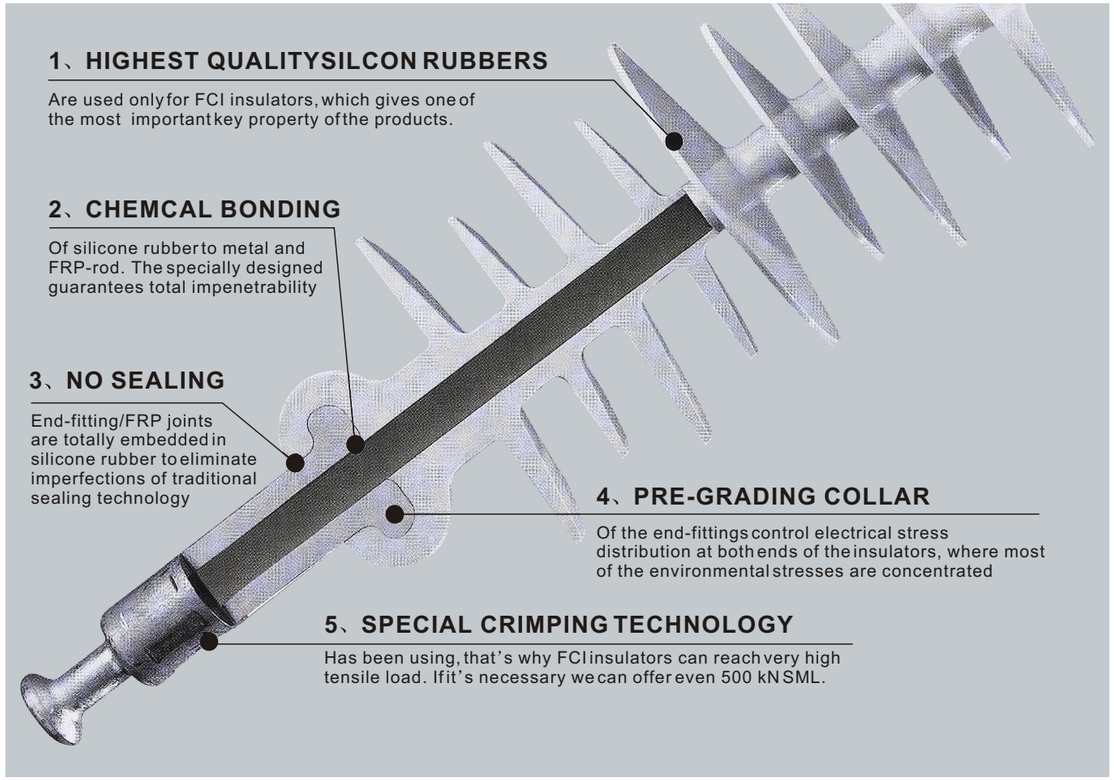

Composite insulators up to 550kV

It is More then 1.000.000 sets of composite insulators in service, without any failure. This record is showing very well the reliability, and the quality of Pomanique comiposite insulators, which is connecting the following facts.

RAW MATERIALS:

All composite insulators are used only the high quality raw material, such as silicon rubber, end fitting, or ECR glass fiber reinforced resin rods.
For this reason, even serviced in highly polluted industrial areas or seashore climate, our composite insulators are operating without any controversy.

PROCCES OF PRODUCTION:

Pomanique adopt one-step moulding technology to produce composite insulator up to 500kV.The procedure is automatic, which guarantees the consistently high quality of insulator.

QUALITY AND CERTIFICATES:

Pomanique use ISO9001 system and ISO14001 management system since 1995.All composite Insulators pass the KEMA 5000 hour ageing test in 2003.

APPLICATIONS:

There is a wide range of application of our insulator, such as:

- Medium and high voltage transmission line insulators.
- Railway insulators.
- Substation post insulators.
- Crossarms insulator.
- Wall bushing.

Composite deadend insulators

CDI series deadend insulators fulfill the requirements of IEC 61109, The sheds of the insulators are made of highly hydrophobic silicon rubber. The core is made of corrosion resistant fiber glass rod and the end fittings are made of hot-dip galvanized steel. They are meant to be used on 12 kV up to 36 kV distribution networks.

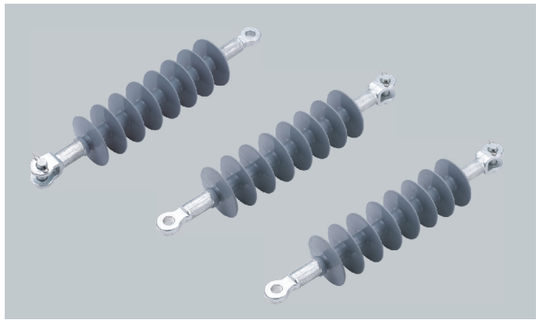

Type	CDI-12/70	CDI-24/70	CDI-36/70
Rated Voltage	12kV	24kV	36kV
Specified Mechanical Load	70kN	70kN	70kN
Section Length H	350mm	440mm	530mm
Dry Arcing Distance h	180mm	300mm	404mm
Leakage Distance	430mm	660mm	990mm
Power Frequency Dry Flashover	110kV	130kV	200kV
Power Frequency Wet Flashover	75kV	110kV	160kV
Number of Sheds	4	6	9

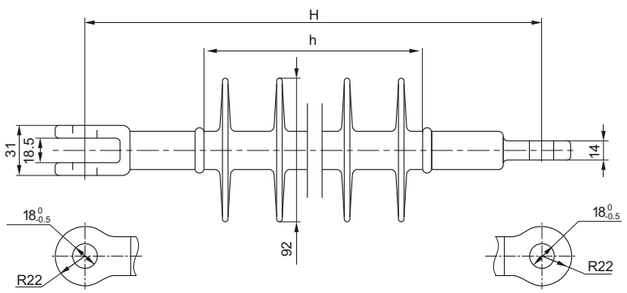

End fittings

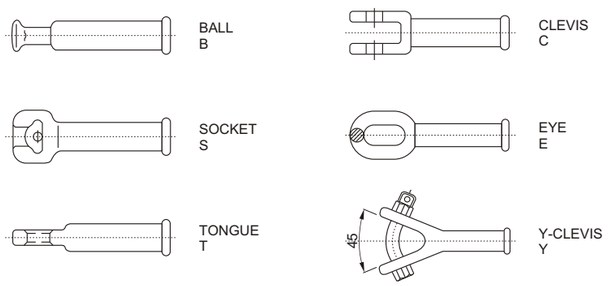

Pin type Insulator

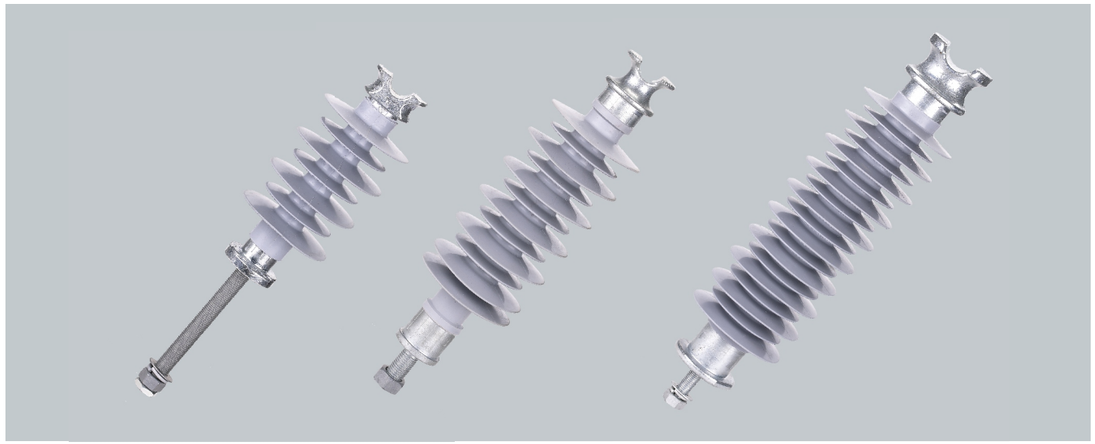

Main technical parameters

Type	Rated voltage (KV)	Speci?ed mechanical load	Section length (mm)	Min Arc distance (mm)	Leakage distance (mm)	Lightning impulse withstand BIL(KV)	Power frequency withstand (wet)(KV)
PDI-12/11	12	11	305	180	550	110	50
PDI-24/11	24	11	305	215	610	145	65
PDI-36/10	36	10	445	321	1040	200	105
PDI-36/12.5	36	12.5	545	405	1650	250	135

PDI-12/11

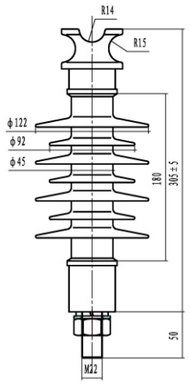

PDI-24/11

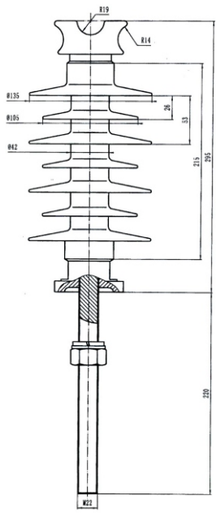

PDI-36/10

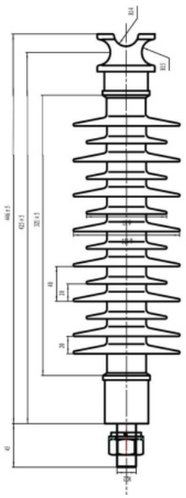

PDI-36/12.5

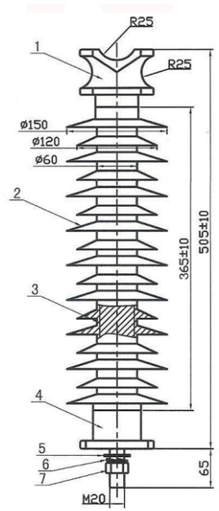

Post insu iator

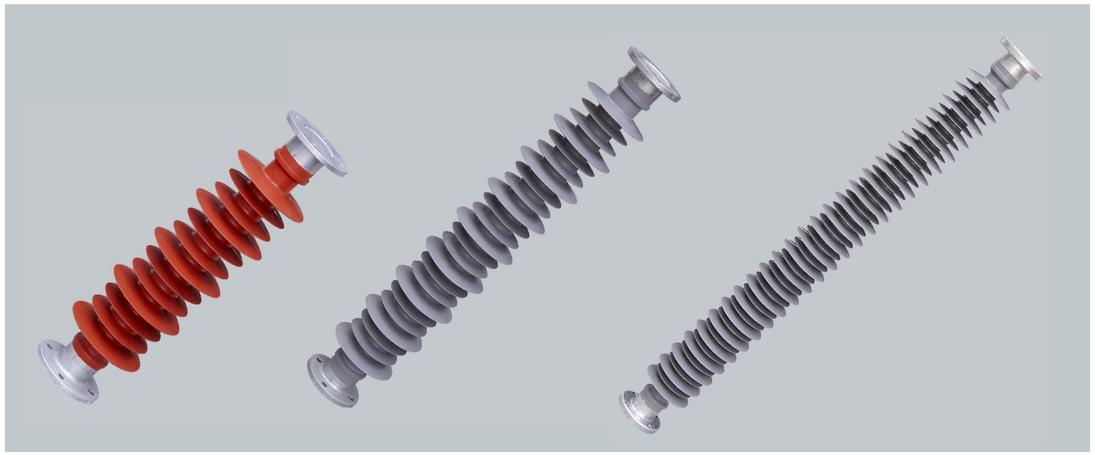

Post insulator

Type	Rated voltage (KV)	Speci?ed mechanical load	Section length H (mm)	Min Arc distance (mm)	Leakage distance (mm)	Lightning impulse withstand BIL(KV)	Power frequency withstand (wet)(KV)	Fig No.
FZSW-15/5	15	5	245	170	600	105	45	1
FZSW-24/8	24	8	420	320	700	125	50	2
FZSW-35/6	35	6	460	360	900	185	95	2
FZSW-66/6	66	6	770	650	1930	325	140	2
FZSW-66/8	66	8	770	650	1940	325	140	2
FZSW-110/6	110	6	1150	1050	2950	325	200	3
FZSW-138/10	138	10	1220	1060	3260	450	200	3
FZSW-220/10	220	10	2440	2080	6520	950	395	3

Dimensions

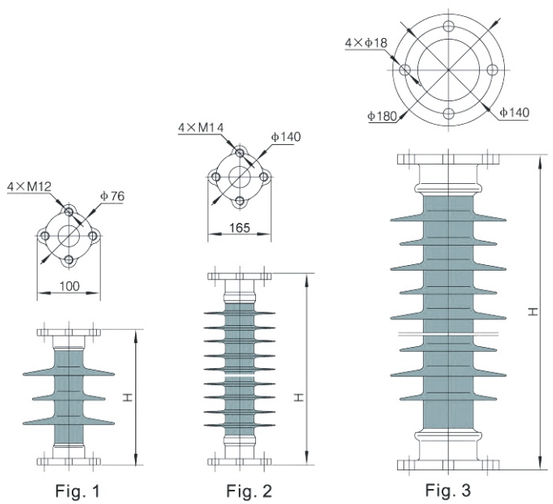

Fig. 1 Fig. 2 Fig. 3

Line post insulators

CDL series line post insulators were designed to be used on long rural lines to provide greater reliability and maintenance free operation. They are now widely used in a varity of pole top configurations to improve the appearance as well as performance of all distribution overhead, rural and urban.

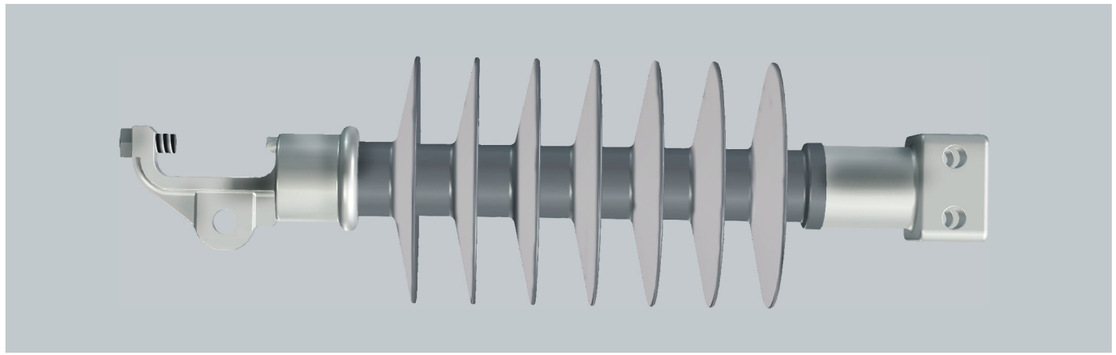

Type	CDL-38	CDL -69	CDL -115	CDL -138
Rated Voltage	38kV	69kV	115kV	138kV
Specified Mechanical Load	12.5kN	11kN	9.5kN	6.6kN
Section Length B	630mm	860mm	1115mm	1510mm
Dry Arcing Distance A	380mm	556mm	848mm	1250mm
Leakage Distance	1330mm	1420mm	2130mm	3150mm
BIL	260kV	340kV	620kV	760kV
Power Frequency Wet Flashover	130kV	195kV	295kv	430kV
Number of Sheds	7	8	12	18

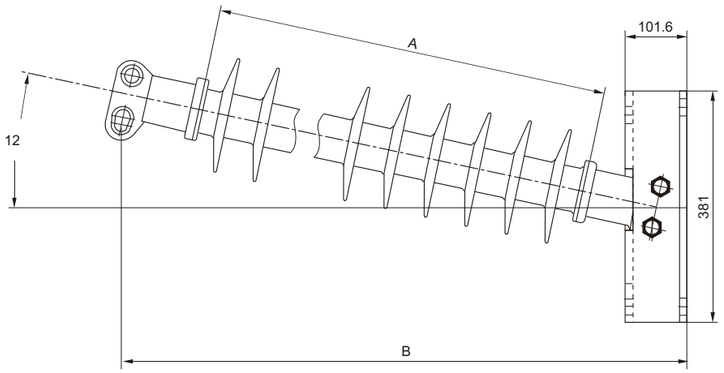

Composite suspension insulators

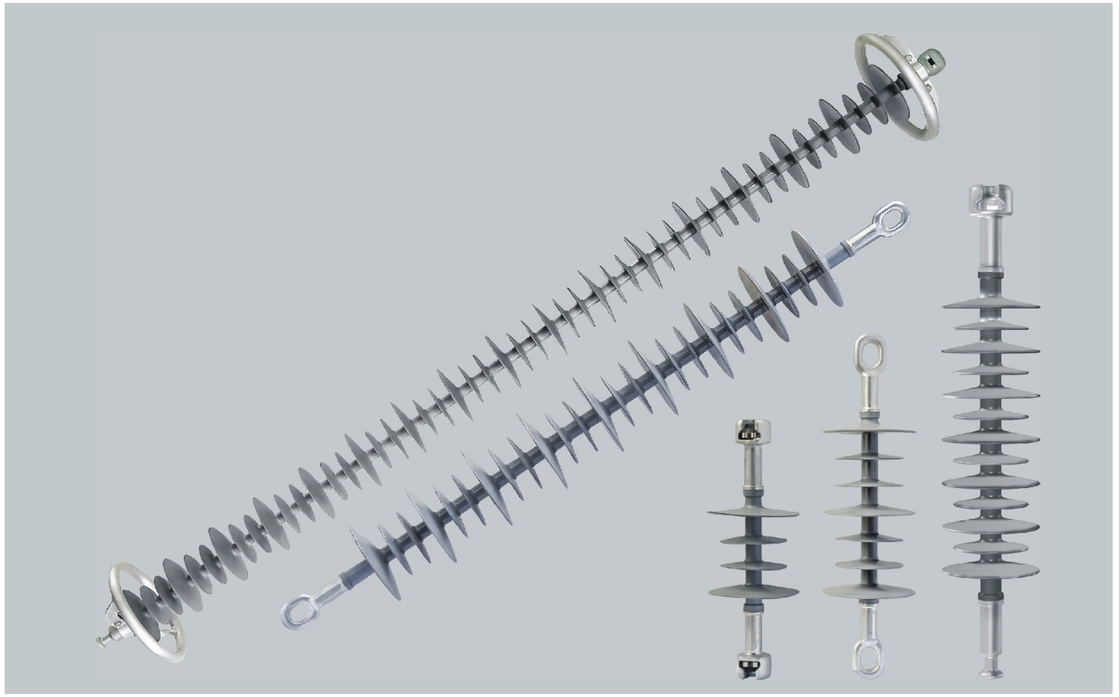

80kN suspension insulators

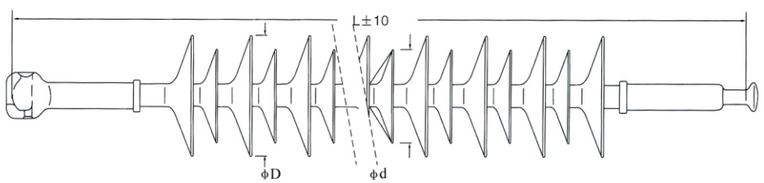

Type	Rated voltage (KV)	SML (kN)	L (mm)	arcing distance (mm)	creepage distance (mm)	Shed Diameter D/d (mm)	Lightning ithstand voltage (kV)	P. F withstand voltage (wet) (kV)
FXBW-12/80L	12	80	450	280	550	144/114	125	65
FXBW-24/80L	24	80	440	270	850	130/100	125	65
FXBW-24/80H	24	80	545	325	900	115/85	145	65
FXBW-33/80L	33	80	570	385	920	115/85	200	95
FXBW-33/80H	33	80	720	555	1650	144/114	250	135
FXBW-36/80L	36	80	670	430	1400	130/100	185	95

100kN and 120kN suspension insulators

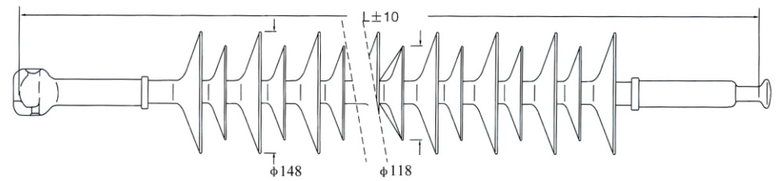

Selection Guide (Line Voltage,kv)							Product Code	No of Shed	Length L (mm)	Leakage distance (mm)	Arc distance (mm)	P.F withstand 50Hz (kV)		Lightning impulse. withstand 1,2/50 (kV)		Weight (kg)
36	69	110	138	145	220	330						Dry	Wet	Pos	Neg	
							FXB-0361209**	9	650	1320	430	110	95	240	285	2.0
							FXB-0691217**	17	940	2140	710	220	195	410	465	2.9
							FXB-0691218**	18	980	2290	750	280	250	480	520	2.7
							FXB-0691219**	19	1020	2470	790	290	260	500	540	3.1
							FXB-0691220**	20	1060	2620	830	300	270	520	560	3.2
							FXB-1101221**	21	1100	2800	870	315	280	540	580	3.3
							FXB-1101222**	22	1140	2950	910	330	300	570	615	3.4
							FXB-1381224**	24	1220	3280	990	380	300	620	670	3.7
							FXB-1451226**	26	1300	3610	1070	415	335	670	725	4.0
							FXB-1451231**	31	1480	4123	1240	435	355	725	775	5.0
							FXB-2201249**	49	2240	6300	1970	710	605	1200	1300	10.2
							FXB-2201251**	51	2320	6630	2050	715	615	1230	1330	10.4
							FXB-2201253**	53	2400	6950	2130	760	640	1270	1370	10.6
							FXB-2201255**	55	2480	7280	2210	810	675	1330	1430	11.0
							FXB-3301265**	65	2860	9075	2600	890	740	1520	1640	12.4
							FXB-3301267**	67	2940	9405	2680	895	745	1540	1660	12.6
							FXB-3301269**	69	3020	9735	2760	905	750	1585	1715	13.4

NOTE: In order to obtain the total length of the insulator(L) with different fittings, please select the kind of fitting end you have to use and refer to the following table:

Ground fitting	Line fitting	Code(2)	Length (L)
SOCKET	BALL	SB	0
CLEVIS	TONGUE	CT	+35
EYE	EYE	EE	+64
EYE	BALL	EB	+29
EYE	TONGUE	ET	+27
CLEVIS	BALL	CB	-8
SOCKET	EYE	SE	-10
Y-CLEVIS	TONGUE	YT	+15
Y-CLEVIS	EYE	TE	+52

Specified Mechanical Load	SML-IEC61109	
Routine Test Load	RTL=50%of SML	
Specified Mechanical Load	100kN	120kN
Routing Test Load	50kN	60kN
Max.torsion Load	90N*m	90N*m

The metal fittings are in galvanized steel

Replace the product code ** with Code(2).

Pomanique™

120kN and 160kN suspension insulators

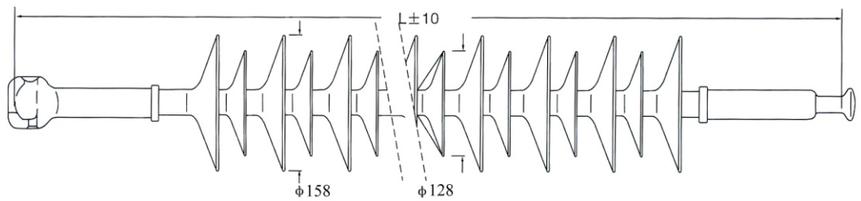

Selection Guide (Line Voltage,kv)					Product Code	No of Shed	Length L (mm)	Leakage distance (mm)	Arc distance (mm)	P.F withstand 50Hz (kV)		Lightning impulse. withstand 1,2/50 (kV)		Weight (kg)
110	145	220	330	420						Dry	Wet	Pos	Neg	
					FXB-1101621**	21	1290	3140	990	380	330	620	675	6.7
					FXB-1101623**	23	1375	3440	1075	415	335	660	725	6.9
					FXB-1101625**	25	1460	3740	1160	435	355	720	780	7.3
					FXB-1451626**	26	1505	3880	1205	445	365	740	790	7.5
					FXB-1451627**	27	1545	4040	1245	450	370	750	800	7.0
					FXB-1451628**	28	1590	4180	1290	455	380	765	820	7.4
					FXB-2201635**	35	1885	5250	1585	565	475	925	990	8.4
					FXB-2201637**	37	1970	5550	1670	615	515	1000	1080	8.9
					FXB-2201641**	41	2140	6150	1840	645	545	1070	1155	9.6
					FXB-2201643**	43	2225	6450	1925	675	575	1140	1230	9.8
					FXB-2201647**	47	2395	7050	2090	710	605	1210	1310	10.4
					FXB-3301661**	61	2990	9140	2690	890	740	1520	1640	11.6
					FXB-3301665**	65	3160	9740	2860	905	750	1585	1715	12.4
					FXB-3301671**	71	3415	10640	3115	930	780	1760	1860	12.8
					FXB-4201675**	75	3585	11240	3285	940	800	1800	1900	13.4
					FXB-4201679**	79	3755	11840	3455	960	820	1810	1920	13.6
					FXB-4201681**	81	3935	12440	3625	980	850	1840	1960	14.3

NOTE: In order to obtain the total length of the insulator(L) with different fittings, please select the kind of fitting end you have to use and refer to the following table:

Ground fitting	Line fitting	Code(2)	Length (L)
SOCKET	BALL	SB	0
CLEVIS	TONGUE	CT	-40
EYE	EYE	EE	+55
EYE	BALL	EB	+20
EYE	TONGUE	ET	+5
CLEVIS	BALL	CB	-25
SOCKET	EYE	SE	+30
Y-CLEVIS	TONGUE	YT	+5
Y-CLEVIS	EYE	TE	+50

Specified Mechanical Load	SML-IEC61109	
Routine Test Load	RTL=50%of SML	
Specified Mechanical Load	120kN	160kN
Routing Test Load	50kN	60kN
Max.torsion Load	120N*m	120N*m

The metal fittings are in galvanized steel

Replace the product code ** with Code(2).

Pomanique™

160kN and 210kN suspension insulators

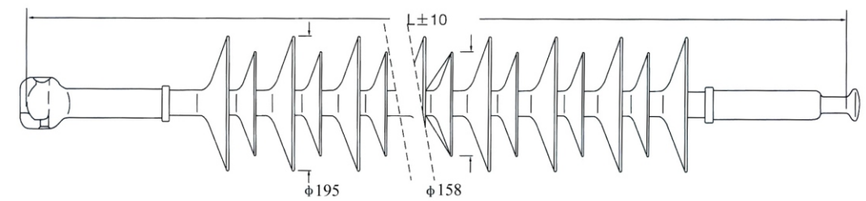

Selection Guide (Line Voltage,kv)				Product Code	No of Shed	Length L (mm)	Leakage distance (mm)	Arc distance (mm)	P.F withstand 50Hz (kV)		Lightning impulse. withstand 1,2/50 (kV)		Weight (kg)
220	330	420	500						Dry	Wet	Pos	Neg	
				FXB-2202141**	41	2270	6590	1970	740	620	1250	1350	10.4
				FXB-2202145**	45	2440	7290	2140	760	640	1270	1370	10.9
				FXB-2202149**	49	2610	7990	2310	810	675	1330	1430	11.4
				FXB-3302165**	65	3312	10380	2932	900	750	1670	1820	13.6
				FXB-4202169**	69	3480	11080	3100	930	780	1760	1860	14.5
				FXB-4202173**	73	3650	11780	3268	950	800	1785	1890	15.1
				FXB-4202177**	77	3820	12480	3435	960	820	1780	1930	17.0
				FXB-5002185**	85	4120	13460	3810	1140	1020	2030	2110	19.6
				FXB-5002189**	89	4285	14160	3980	1200	1250	2200	2300	20.5
				FXB-5002193**	93	4450	14860	4150	1280	1100	2400	2510	21.0

NOTE: In order to obtain the total length of the insulator(L) with different fittings, please select the kind of fitting end you have to use and refer to the following table:

Ground fitting	Line fitting	Code(2)	Length (L)
SOCKET	BALL	SB	0
CLEVIS	TONGUE	CT	-40
EYE	EYE	EE	+55
EYE	BALL	EB	+20
EYE	TONGUE	ET	+5
CLEVIS	BALL	CB	-25
SOCKET	EYE	SE	+30
Y-CLEVIS	TONGUE	YT	+5
Y-CLEVIS	EYE	TE	+50

Specified Mechanical Load	SML-IEC61109	
Routine Test Load	RTL=50%of SML	
Specified Mechanical Load	160kN	210kN
Routing Test Load	80kN	110kN
Max.torsion Load	160N*m	160N*m

The metal fittings are in galvanized steel

Replace the product code ** with Code(2).